NOAA

LIST OF SHELL OPENINGS

ITEM NO.	DESCRIPTION	SIZE OF OPENING	SIDE OF SHIP	FWD	AFT	FR	DIST FRM ℄ CUT TO ℄ OF SHIP	HGT TO CTR ABV KEEL	REMARKS	
1									REMOVED & BLANKED	A5 B
2	TRANSDUCER OPENING	10-1/8"	S			30	12"			
3			P			30				
4			S			43				
5			P			43				
6			S			45				
7			P			45				
8			S			47				
9	↓	↓	P		↓	47	↓			
10	7192 TRANSDUCER	2-1/2"	S		11"	46	6"			A5
11	TRANSDUCER HOUSING ON SKEG	7'3" X 2'0"	CL		6"	98	—			
12	SAMPLING SEA CHEST	15-1/2"	S		8"	11	4'-0"	4'-0"		
13									REMOVED & BLANKED	B
14	BOW THRUSTER SEA CHEST	9"	P		10"	14		3'-6"		A5
15	HIGH SUCTION SEA CHEST	15-1/2"	P/S		8"	58		5'-0"		
16	LOW SUCTION SEA CHEST		P/S		18"	59	8'10-1/2"			
17	BALLAST SEA CHEST		S		8"	67	3'-8"			
18	FIRE PUMP SEA CHEST	↓	P		10"	71	9'-6"			
19	CATHODE PROTECTION ANODE		P		10"	12		5'-6"		
20		84" X 3-1/2"	P/S	19"		31	13'-10"			B
21		19" X 3-1/2"	P/S		8 3/4"	69	16'-0"			B
22	↓	72" X 3-1/2"	S		10"	107	19-3/4"			B
23									REMOVED & BLANKED	A5 B
24	DBLR FOR UNDERWATER LOG	7" X 3"	P		10"	56	18"			
25									REMOVED & BLANKED	B
26	BILGE DISCH	3"	P		1'0"	3	SHELL	14'-3"		
27									REMOVED & BLANKED	B
28	FREEZER & REFER DR. TK. OVBD DISCH	1"	S		8"	37		14'0-1/2"		
29	OVERBOARD DISCHARGE	4" IPS	S		8"	46	SHELL	10'7-1/2"		
30	OVBD DISCH SALT WATER COOLING	3"	S		10-1/2"	52		10'7-1/2"		A5
30A	OVBD DISCH SALT WATER COOLING	4"	P		10-1/2"	52		10'7-1/2"		A4
31	OVERBOARD DISCHARGE	4" IPS	S		10-1/2"	53		6'-6"		A5
32	OVBD DISCH BILGE PUMP	3"	P		10-1/2"	53		14'-3"		
33	BILGE DISCH	3"	P/S		11"	68		14'-9"		
34	OVBD DISCH S.W. CLG	1-1/2"	P/S		10-1/2"	69		10'-2"		
35	OVBD DISCH SEWAGE SYS	4"	P		10"	71	↓	9'-0"		
36									REMOVED & BLANKED	B
36A									REMOVED & BLANKED	A4 B
37	OVERBOARD DISCHARGE	2" IPS	P		14"	108	SHELL	14'-3"		
38	DRAFT GAUGE	2"	S		10"	13	4"			
39	DRAFT GAUGE IN SKEG	2"	CL		10"	103				
70	DECK DRAIN VALVE & SCUPPER	3"	P/S		10"	96	SHELL	14'-3"		A4
71	GALLEY DRAIN OVBD	1"	P		10"	64		14'-6"		B
72	GALLEY DRAIN TANK OVBD	2-1/2"	P		11"	64		13'-9"		B
73	OVERBOARD DISCHARGE	1-1/2"	P		10"	60		11'-6"		
74	OVBD DISCH SALT WATER COOLING	2"	S		10"	66		10'-9"		
75	BILGE DISCHARGE	3"	S		10"	62		14'-9"		
76	OVERBOARD DISCHARGE	2-1/2"	S		14"	53		15'-3"		
77	OVERBOARD DISCHARGE	1-1/2"	P/S		10"	31		14'-0"		
78	DECK DRAIN VALVE & SCUPPER	3"	P/S		11"	24		14'-9"		
79	OVERBOARD DISCHARGE	2"	P		10"	14		13'-3"		
80	OVERBOARD DISCHARGE	2"	P		10"	25		13'-6"		
81	STEAM GENERATOR BOTTOM BLOW	1-1/2"	P		8"	52		9'-6"		
82	SALT WATER SERVICE OVBD	1-1/2"	P		14"	53		10'-0"		
83	(NEW)	1"	S	–	6"	11		3'-1 1/2"		B
84	EVAPORATOR	2-1/2"	S	6-1/8"		67		14'-0"		B
85	EVAPORATOR	2-1/2"	S	–	17"	63		11'-9"		B
86	EVAPORATOR	3"	P	12-7/8"	–	60		15'-9"		B
87	EVAPORATOR	2"	P	–	12-1/8"	60	↓	12'-3"		B
88	TRANSDUCER	23'-4"x5'-6"	P	–	2-1/4"	20	SHELL	–	13" BELOW KEEL @ C.L. OF FAIRING	B
89	TRANSDUCER	17'-6"x1'-11"	S	–	1'-5-1/8"	21	SHELL	–	30 1/2" BELOW KEEL @ C.L. OF FAIRING	B
90	TRANSDUCER	18" x 6 1/2"	P	–	4 5/8"	44	60"	–		B
91	WEATHER DECK DRAINS	4"	P/S	–	9 1/2"	116	SHELL	14'-8 3/16"	8" ABOVE STEERING GEAR FLAT DECK	B
92	(NEW)	3/4"	P	–	10"	14	SHELL	2'-7 1/4"		B

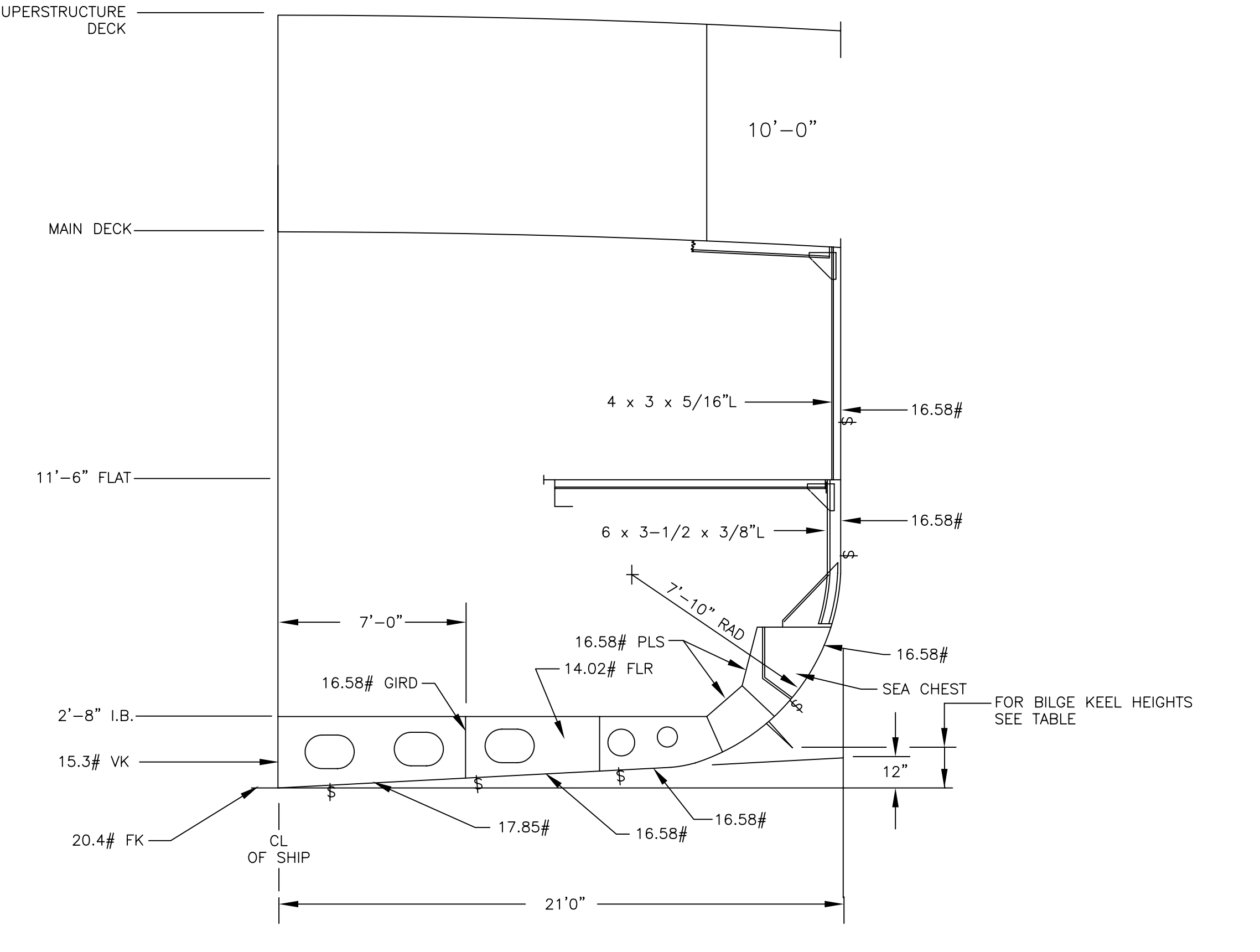
SUPERSTRUCTURE DECK
MAIN DECK
10'-0"
4 x 3 x 5/16"L
16.58#
11'-6" FLAT
6 x 3-1/2 x 3/8"L
16.58#
7'-10" RAD
7'-0"
16.58# PLS
14.02# FLR
16.58# GIRD
16.58#
SEA CHEST
FOR BILGE KEEL HEIGHTS SEE TABLE
2'-8" I.B.
15.3# VK
12"
20.4# FK
17.85#
16.58#
16.58#
CL OF SHIP
21'0"

MIDSHIP SECTION

STRUCT AT FR 57 SHOWN
PORT LKG AFT
SCALE: 1/4"=1'-0"

HTS.-BILGE KEEL

FRAME	HEIGHT ABL
44	4'1-1/4"
48	2'2-1/4"
52	1'9-3/4"
56	1'8"
60	1'8"
64	1'10"
68	2'3-1/2"
72	4'0-1/2"

BLEEDER PLUG LOC

ITEM NO.	INCHES AFT	OF FRAME	DIM OFF CL	PORT OR STBD	
40	14	19	0'-7"	S	
41	14	28	0'-7"	P	
42	14	42	0'-8"	S	
43	14	42	0'-8"	P	
44	14	51	0'-7"	S	
45	14	51	0'-7"	P	
46	7	52	7'-5"	S	
47	8	52	0'-7"	P	
48	8	52	7'-5"	P	
49	7	67	5'-1"	S	
50	7	67	5'-1"	P	
51	14	69	0'-7"	S	
52	7	70	0'-7"	S	
53	7	70	0'-7"	P	
54	7	72	12'-7"	S	
55	7	72	12'-7"	P	
56	7	76	1'-6"	S	
57	7	76	1'-6"	P	
58	7	79	7'-7"	S	
59	7	79	7'-7"	P	
60	7	88	7'-7"	S	
61	7	88	1'-6"	S	
62	7	88	1'-6"	P	
63	7	88	7'-7"	P	
64	7	97	1'-6"	S	
65	7	97	1'-6"	P	
66	7	107	1'-6"	P	
67	16-7/8"	114	7'-3"	S	B
68	16-7/8"	114	7'-3"	P	B
69	18	9	CL	—	

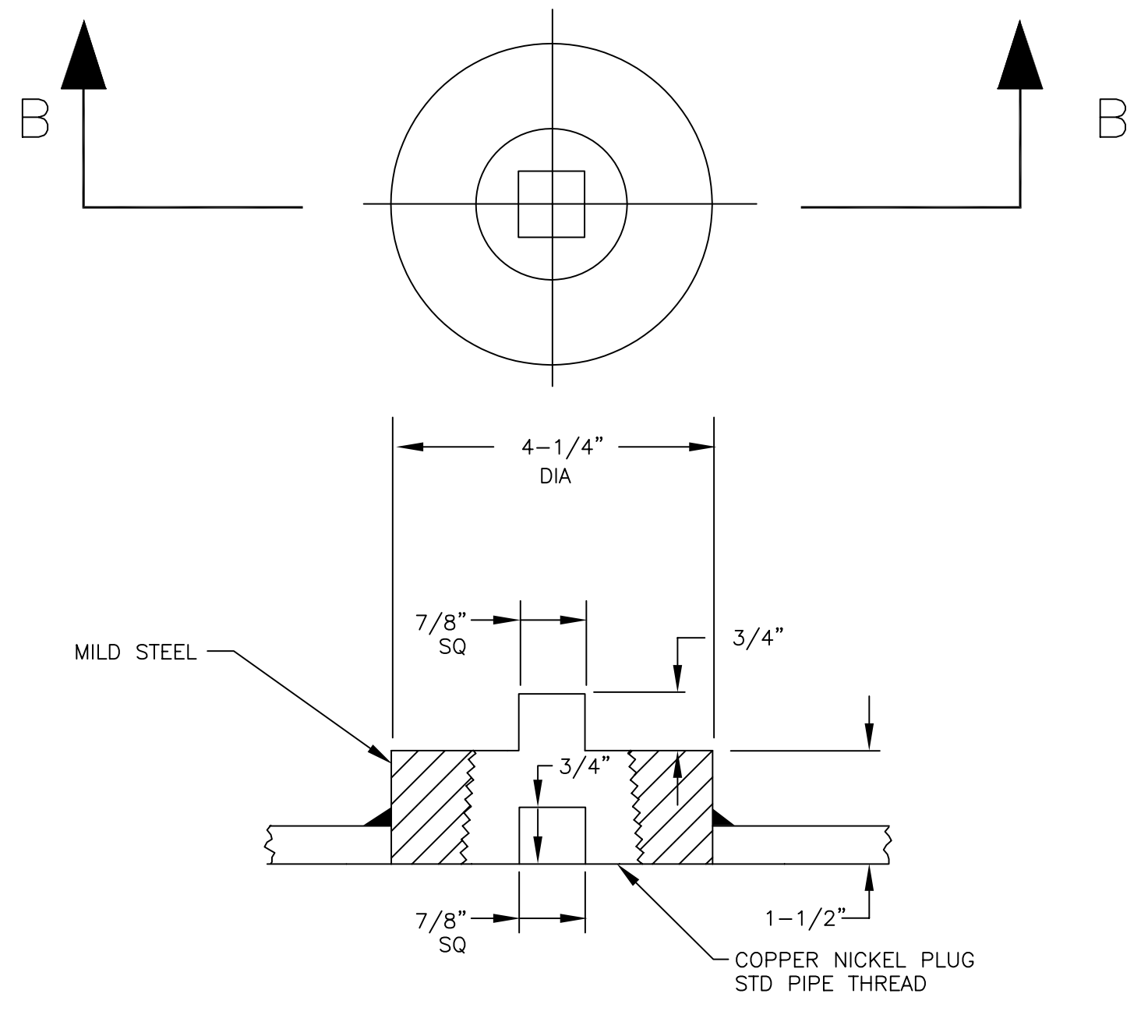
B
B
4-1/4" DIA
7/8" SQ
3/4"
MILD STEEL
3/4"
7/8" SQ
1-1/2"
COPPER NICKEL PLUG STD PIPE THREAD

SECTION B-B

TYP BLEEDER PLUG
FOR LOCATION SEE TABLE IN PANEL 7
SCALE" 6"=1'-0"

GENERAL NOTES

1. THIS DWG HAS BEEN DEVELOPED FROM NOAA DWG FA-S0701-1, ALT 3. ALL INFORMATION FROM DWG FA-S0701-1 AND ALTERATIONS THERETO HAVE BEEN INCORPORATED INTO THIS DWG. IN ADDITION, HULL PENETRATIONS, TRANSDUCER LOCATIONS, AND OTHER UNDERWATER BODY FEATURES WERE VERIFIED, JAN 1990, BY SHIPCHECK OF THE NOAA SHIP RAINIER. A2
2. KEEL BLOCKS SHOWN ON PLAN ARE 14" x 14" x 4'0" LONG SPACED ON 3'0" CENTERS.
3. BLOCK ARRANGEMENT SHOWN IS FOR THE INITIAL DOCKING. (DOCKING POSITION NO. 1)
4. IN ORDER TO CLEAN AND PAINT THE ENTIRE BOTTOM OF THE VESSEL IN THREE SUCCESSIVE DOCKINGS, THREE DOCKING POSITIONS ARE GIVEN ON PLAN. DIMENSIONS SHOWN ARE FROM AFT REFERENCE POINT TO THE AFT SIDE OF THE AFTERMOST KEEL BLOCK.
5. BILGE BLOCKS ARE SPACED ON 12'0" CENTERS AND ARE LOCATED FOR THREE DOCKING POSITIONS AS SHOWN ON PLAN. FOR BILGE BLOCK HEIGHTS SEE DWG FA-S0501-1 MOLD LOFT OFFSETS BOOKLET.

REFERENCES

REF NO	DWG NO	TITLE
1	S22-1-1K	RUDDERS & RUDDER STOCKS
2	S19-5-1K	CATHODIC PROTECTION SYSTEM
3	S11-8-1K	STRUTS & FAIRWATERS
4	S43-2-1K	ARRGT & DETS STERN TUBE, STUFFING BOX & BEARINGS
5	S48-1-3	DOCKING & BLEEDER PLUGS
6	S11-3-3K	FRAMING-BOW THRUSTER, LODAR RM & 8'0" FLAT
7	S51-3-1L	DRAFT GAUGES-ARRGT & PIPING
8	S48-24-1	SEA CHESTS
9	S36-1-24K	GARBAGE RM & CHUTE
10	S48-5-1K	S.W. COOLING SYS MN ENGINES AND REDUCTION GEAR
11	S48-1-4L	BALLAST & D.O. TRANSFER SYS
12	S48-3-2L	ARRANGEMENT-FIREMAIN SYS
13	S11-13-4L	FOUNDATIONS FOR EQUIPMENT IN SOUND RMS NO. 1 & 2
14	S48-1-1	DIAGRAM OF BILGE SYSTEM
15	S48-7-3K	SEWAGE DISPOSAL SYSTEM

REVISIONS

REV	ZONE	ITEM	DESCRIPTION	BY	DATE	APPD
A	ALL	1	GENERAL UPDATE TO INCORPORATE FEATURES FOUND DURING SHIPCHECK OF NOAA SHIP RAINIER ON DOCK 10 JAN 1990	ART ANDERSON ASSOCIATES PER TAR NC2-014.1(89)	MAY 1990	
	4H	2	MODIFIED VERIFICATION DATE IN NOTE 1			
	10C	3	MODIFIED TABLE OF PAINTED SURFACES TO SUIT PARABOLIC TOP OF BOOT TOPPING			
	13D, 13E, VAR	4	ADDED ITEM NO'S 30A, 36A AND 70 THRU 82 TO LIST OF SHELL OPENINGS LOCATED THESE ITEMS ON PROFILE VIEW AND PLAN VIEW AS APPROPRIATE			
	13H, 13G, 13F	5	CORRECTED ITEM NO'S 1, 10, 14, 23 – 28, 30, 31 – 33 TO SUIT SHIPCHECK FINDINGS			
B	MULTIPLE		ADDED NEW OPENINGS 83-92 REMOVED OPENINGS 1, 13, 23, 25, 27, 36, 36A REVISED OPENINGS 20, 21, 67, 68, 71, 72	SEAWORTHY SYSTEMS TASK SSI-041(04)	JUNE 3, 2004	

PRINCIPAL DIMENSIONS

LENGTH OVERALL	230'9-3/8"
LENGTH BETWEEN PERPENDICULARS	198'9"
BREADTH MOLDED	42'0"
DEPTH MOLDED(MN DK AT FR 71)	20'0"
FRAME SPACING	21"

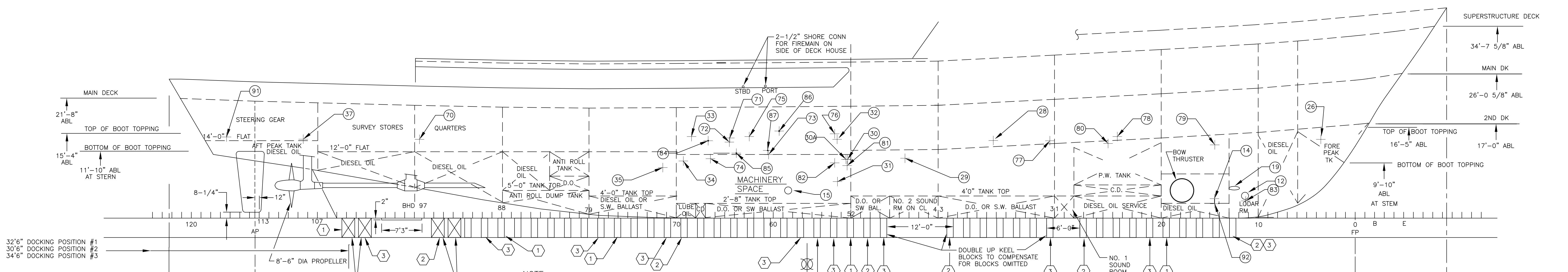
SUPERSTRUCTURE DECK
34'-5 5/8" ABL
MAIN DK
26'-0 5/8" ABL
2ND DK
17'-0" ABL
TOP OF BOOT TOPPING
16'-5" ABL
BOTTOM OF BOOT TOPPING
9'-10" ABL AT STEM
MAIN DECK
21'-8" ABL
TOP OF BOOT TOPPING
BOTTOM OF BOOT TOPPING
15'-4" ABL
11'-10" ABL AT STERN
STEERING GEAR
AFT PEAK TANK DIESEL OIL
12'-0" FLAT
SURVEY STORES
QUARTERS
DIESEL OIL
ANTI ROLL TANK
D.O.
ANTI ROLL DUMP TANK
5'-0" TANK TOP
4'-0" TANK TOP DIESEL OIL OR S.W. BALLAST
MACHINERY SPACE
2'-8" TANK TOP
LUBE OIL
D.O. OR SW BALLAST
D.O. OR SW BAL.
NO. 2 SOUND RM ON CL
4'0" TANK TOP
D.O. OR S.W. BALLAST
P.W. TANK
C.D.
DIESEL OIL SERVICE
BOW THRUSTER
DIESEL OIL
LODAR RM
FORE PEAK TK
2-1/2" SHORE CONN FOR FIREMAN ON SIDE OF DECK HOUSE
STBD PORT
8-1/4"
12"
2"
BHD 97
7'3"
AP
FP
120
113
107
88
79
70
60
52
31
20
10
0
B
E
32'6" DOCKING POSITION #1
30'6" DOCKING POSITION #2
34'6" DOCKING POSITION #3
8'-6" DIA PROPELLER
DOUBLE UP KEEL BLOCKS
12'-0"
6'-0"
DOUBLE UP KEEL BLOCKS TO COMPENSATE FOR BLOCKS OMITTED
NO. 1 SOUND ROOM
15'-6 3/8"
L.B.P. 198'-9"
LENGTH OVERALL 230'-9 3/8"
16'-6"

NOTE
OMIT KEEL BLOCKS MARKED ⟨1⟩ FOR DOCKING POSITION #1
OMIT KEEL BLOCKS MARKED ⟨2⟩ FOR DOCKING POSITION #2
OMIT KEEL BLOCKS MARKED ⟨3⟩ FOR DOCKING POSITION #3

PROFILE VIEW

21" FRAME SPACING THROUGHOUT
SCALE: 1/8"=1'0"

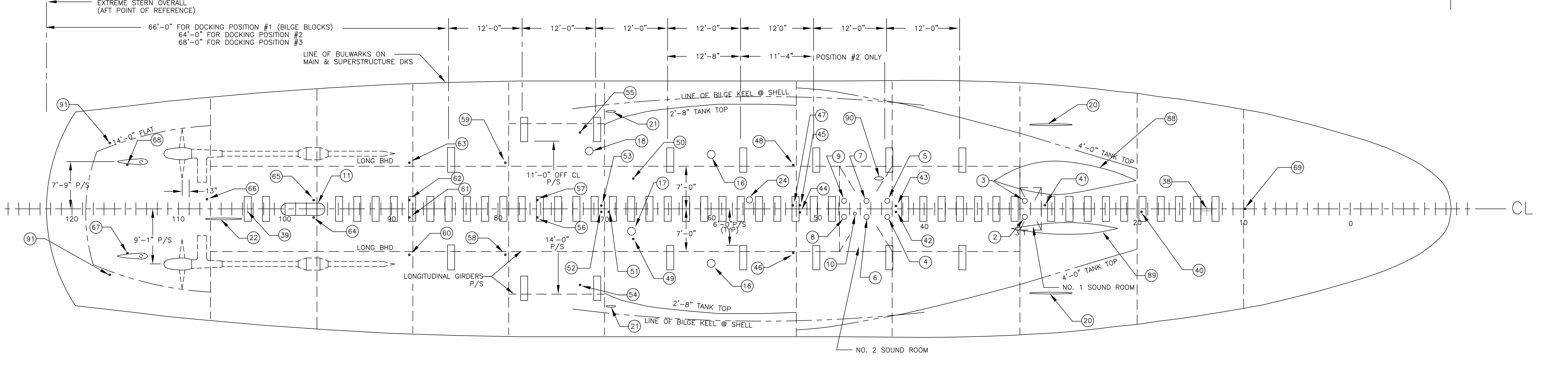
LENGTH OVERALL 230'-9 3/8"
EXTREME STERN OVERALL (AFT POINT OF REFERENCE)
66'-0" FOR DOCKING POSITION #1 (BILGE BLOCKS)
64'-0" FOR DOCKING POSITION #2
68'-0" FOR DOCKING POSITION #3
12'-0"
12'-8"
11'-4"
POSITION #2 ONLY
LINE OF BULWARKS ON MAIN & SUPERSTRUCTURE DKS
LINE OF BILGE KEEL @ SHELL
2'-8" TANK TOP
4'-0" TANK TOP
LONG BHD
LONGITUDINAL GIRDERS P/S
11'-0" OFF CL P/S
9'-1" P/S
7'-9" P/S
NO. 1 SOUND ROOM
NO. 2 SOUND ROOM
CL

PLAN VIEW

NOTE: FOR BLEEDER PLUGS SEE SECTION B-B

TABLE OF PAINTED SURFACES

SHELL BELOW BOOT TOPPING (INCL. RUDDER)	8411 SQ FT
BOOT TOPPING	2056 SQ FT
SHELL ABOVE BOOT TOPPING & BULWKS	7130 SQ FT

A3

BEARING ON BLOCKS

SUPPORT	POSITION #1	POSITION #2	POSITION #3
KEEL BLOCKS (14" x 24" BEARING)	15,120 SQ IN (45 BLOCKS)	15,792 SQ IN (47 BLOCKS)	14,448 SQ IN (43 BLOCKS)
BILGE BLOCKS (14" x 24" BEARING)	5376 SQ IN (16 BLOCKS)	5376 SQ IN (16 BLOCKS)	5376 SQ IN (16 BLOCKS)
TOTALS	20,496 SQ IN	21,168 SQ IN	19,824 SQ IN
BEARING PER SQUARE INCH BLOCKING	177.8#	172.2#	183.8#
BEARING PER SQUARE FOOT BLOCKING	11.43 T.	11.07 T.	11.82 T.
TONS DISPLACEMENT AT 13'0" DRAFT=1627 TONS			

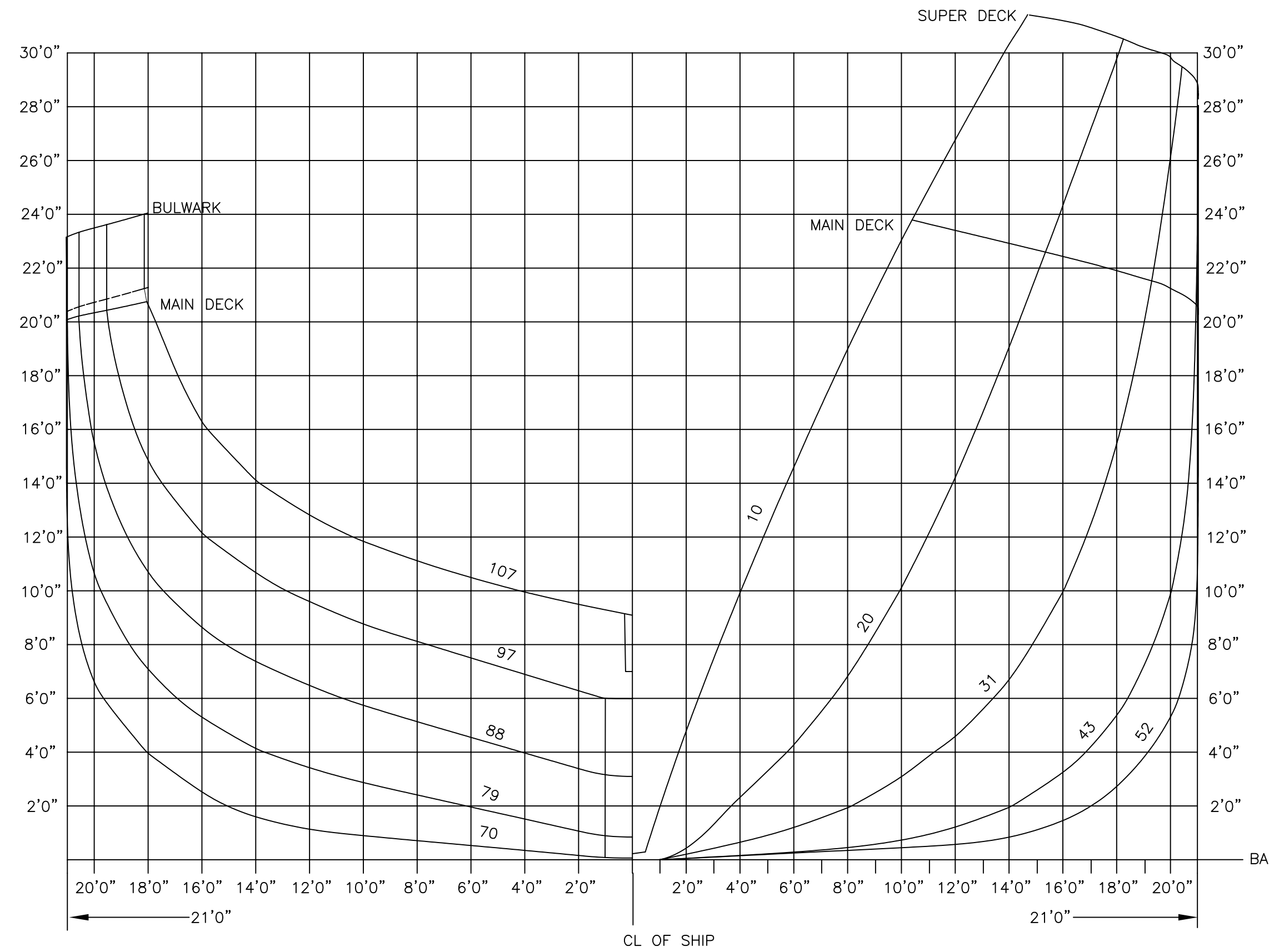
SUPER DECK
BULWARK
MAIN DECK
30'0"
28'0"
26'0"
24'0"
22'0"
20'0"
18'0"
16'0"
14'0"
12'0"
10'0"
8'0"
6'0"
4'0"
2'0"
BASE LINE
20'0" 18'0" 16'0" 14'0" 12'0" 10'0" 8'0" 6'0" 4'0" 2'0"
2'0" 4'0" 6'0" 8'0" 10'0" 12'0" 14'0" 16'0" 18'0" 20'0"
21'0"
CL OF SHIP
107
97
88
79
70
10
20
31
43
52

BODY PLAN

FRS 10,20,31,43,52,70,79,88,97 & 107
SCALE: 1/4"=1'0"

MA HULL NO.	YARD HULL NO.	SHIP'S NAME	BUILDING YARD
198	645	RAINIER	AEROJET-GENERAL SHIPYARDS, INC.
197	644	FAIRWEATHER	AEROJET-GENERAL SHIPYARDS, INC.

ART ANDERSON
ASSOCIATES
148FIRST STREET BREMERTON, WA 98310
(206) 479-5600 FAX 479-5605
65 MARION STREET SEATTLE, WA 98104
(206) 622-6221

NATIONAL OCEAN SERVICE
PACIFIC MARINE CENTER (NOAA)
1801 FAIRVIEW AVE. E.
SEATTLE, WA 98102

APPROVALS	DATE
CHIEF ENG BILL CAMPBELL /S/	10/30/87
PROJECT ENG J. CARLSON /S/	10/30/87
CHECKED BY JACK CROCKER /S/	10/28/87
DRAWN BY M. KING /S/	10/27/87

TITLE
DOCKING PLAN

DWG NO. FA-S0701-2-1
REV. B
SIZE H
SCALE AS NOTED
SHT. 1 OF 1